ISSN- 2394-5125 VOL 07, ISSUE 02, 2020

A Novel Method for Health Care System Using ZigBee Based WSN

Dr.V.JANAKIRAMAN 1, Dr.SUNDARA RAJULU N 2
[1] Professor, Department of ECE,
[2]Professor, Department of CSE,
[1,2] Dhanalakshmi Sirinvasan College of Engineering and Technology, Chennai

Abstract: Wireless Sensor Networks (WSNs) are used in the monitoring of biomedical parameters of a person using body sensors. ZigBee is wireless communication technology. This mode can be implemented for observing such parameter variations in a patient under investigation at health care centers. Among these, ZigBee is the genuine solution for network connectivity. There are popular solutions to remotely observe health parameter and most are used for cardiac monitoring. The majority systems are expensive. This paper deals with most of the biomedical parameters of a patient like heartbeats, body temperature, glucose levels (O_2), respiratory conditions and so on, by which individuals can be monitored from a remote location and unusual abnormalities, can be quickly indicated through messaging assistance. The physiological quantities obtained from sensors are transferred to the programmed microcontroller to the c1omputers over ZigBee. A healthcare professional retrieves this information over a secure connection. This service makes it feasible to locate patients even while they are outside of the healthcare center. This system is cost effective and the results indicate that the system has a very good response time.

Keywords: Body sensors, Network intrusion detection, Wireless, WSN, ZigBee transceivers**.**

I. INTRODUCTION

Wireless communication standards such as GSM, Wi-Fi are well known among people in the modern community. ZigBee
[1] is a combination of software, hardware, and service companies that have developed a universal standard for wireless, networking of sensors and microcontrollers or node MCU. The name ZigBee is related to come from the domestic honeybee, which uses a zigzag type of pattern to communicate necessary information to other hive members. ZigBee works with limited power consumption with a 2.4GHz frequency band, which need not require a license. Many devices can be
connected to a single network is a principal characteristic of the network. The following steps to be performed for health monitoring of a patient:

- A Patient wears a sensor.
- A Sensor is directly connected to the MCU.
- A Microcontroller is connected to ZigBee.
- Data acquired by sensor goes to a computer via ZigBee.
- The computer runs a medical data analysis program.
- Finds if there is anything alarming like high pressure,heartbeat or temperature.
- It sends back an alarm to the patient side through ZigBee.

The initial parameter changes can be measured by sensor, then performed by microcontroller unit and then sent to the doctor via ZigBee network, which helps doctor in proper diagnosis and quality of treatment. Embedded C is used for programming the microcontroller unit. The stored results can be sent to the in-charge physician via GSM transmitter on a network. This information helps physician to take immediate action, which prevents further changes or damage in the health condition ofa patient.

ISSN- 2394-5125 VOL 07, ISSUE 02, 2020

II. PATIENT MONITORING

The acute disease may convert in to chronic disease, which causes a broader range of health issues. The change in sugar level, respiratory problems like tuberculosis or asthma, congestive heart failure or heart dysfunction, and mental stress. In many cases, these require some kind of health monitoring. The categories of health monitoring [8] are as follows:

A. *Episodic Patient Monitoring*

In this case, the patient's vital signs such as heart rate, body temperature and disease-specific indicators such as blood pressure, blood glucose level are monitored to determine anomalies and spot trends. The monitoring is done periodically.

B. Continuous Patient Monitoring

In this case, the important parameters such as pulse rate, body temperature, blood pressure, O_2 level are monitored constantly and results are recorded at database server. This is helpful for immediate treatment and recovery to the patient.

C. Patient Alarm Monitoring

In this case, the patient's vital signs and disease-specific indicators are monitored on a progressive basis. The results are recorded at database server and forwarded to the gateway with date and time management. The gateway forwards the message to a database server with great level of security. The signal obtained on a server is compared with healthy range of parameters. If any abnormalities are seen, an alarm is generated automatically.

III. SYSTEM ARCHITECTURE

A sensor node is made up of a power unit, a processing unit, sensing unit, and a communication unit. The processing unitis responsible to collect and process signals captured fromthe sensor and transmit them to the network. Sensors are devices that produce a measurable response to change in a physical condition like temperature and pressure. The wireless communication channel provides a medium to transfer signals from sensors to a computer network. In recent developmentin wireless communication, small size sensors and node MCU (microcontrollers) works efficiently in short distancecommunication.

The system architecture consists of sensor nodes, a wireless transceiver, and hospital web server with a database server and alarm section. It is connected to the internet through TCP/IP to send a message to the healthcare center or doctor for emergencycare of the patient. A sensor identifies the present health statusof a patient, and then a wireless transreceiver forward this signal through network like ZigBee. A message is received at data base server located at the hospital. This received informationis compared with the normal range, if any serious changes or un-stability is observed, then an urgent message is sent to the concerned doctor for immediate action. Transmitter sectionsystem architecture is shown in Fig. 1.

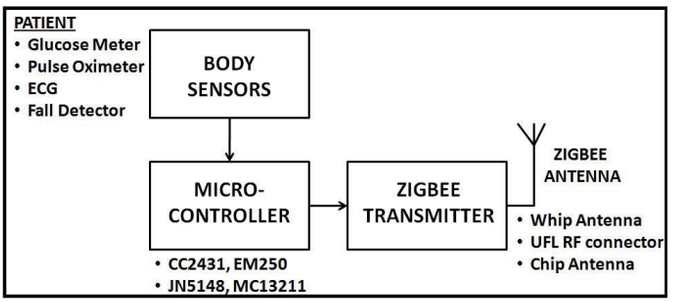

Fig. 1: System Architecture – Transmitter Section

A. Body Sensors

Individual sensors have limited sensing region, processing power, and energy, networking a large number of sensors givesrise to robust, reliable and accurate sensor network covering a wider region.

Sensing is fundamental to all body area sensor networks [13], and its quality depends heavily on industry advances in signal conditioning, micro-electro-mechanical systems (MEMS), andnanotechnology. There are three types of sensors: physiological sensors, bio-kinetic sensors, and ambient sensors [11]. A set of body sensors may include the following:

- *Glucose Meter:* The sensor measures the approximate concentration of glucose in the blood. It is used by for diabetes management.
- *Pulse Oximeter:* The sensor measures O_2 level present inthe blood. It can be monitored once a day. The recorded results are transmitted daily for future diagnosis.

- *Electro-Cardio Graph (ECG):* This device records the electrical activity of the heart and monitors the rate of heartbeat. The graph can be monitored continuously in serious health condition. But, periodic measurement can help to avoid such abnormalities in time. ZigBee healthcare enabled devices will allow the user to record in cardiac monitoring and fitness applications.
- *Fall Detector:* This sensor is used to detect the position of the detecting element. An alarm is generated in such situation.
- *Wrist Transmitter:* This device is used in case of emergency health issues. Sometimes, a person finds himself in uncomfortable situation, and he needs an immediate help from a medical centre, the wrist transmitter, helps him to send an alarm to a health care unit. The medical staff acts immediately as they receive an alarm.

B. Microcontrollers

System Architecture can be implemented by wireless sensor networks used microcontrollers. These are ZigBee Transceivers.

- *CC2431:* The CC2431 [3, 16] is a chip from Texas Instruments. The CC2431 is a true System-On-Chip (SOC) for wireless sensor networking [12] ZigBee and IEEE 802.15.4 [2] solutions. The chip includes a location detection hardware module that can be used in so-called blind nodes to receive signals from nodes with known locations. This microcontroller gives the excellent performance with CC2420 [10] RF transceiver.
- *EM250:* The EM250 [4, 17] is a single-chip solution. It operates at 2.4GHz with IEEE 802.15.4 compliant transceiver. It contains integrated 128 kB of Flash memory and 5 kB of SRAM for ZigBee-based applications.

  It provides low power, increased performance, serial interface and receives channel filtering.
- *JN5148:* The JN5148 [5, 18] is a 32-bit RISC single chip wireless microcontroller. It is robust and secures low power wireless application used for ZigBee PRO network. It also operates at 2.4 GHz with IEEE 802.15.4 compliant transceiver. It includes RAM, ROM, analog, and digital devices. It has battery life optimization and wireless networking protocol stacks.
- *MC13211:* The MC13211 [6, 19] is a chip from Freescale's ZigBee platform which provides a low power 2.4 GHz RF transceiver. It is inbuilt microcontroller embedded into a single chip. This microcontroller can be used for wireless applications from point-to-point connectivity to a complete ZigBee network.

IV. WIRELESS TECHNOLOGY

In the present application, several wireless transmission techniques such as ZigBee, Bluetooth, UWB, Wi-Fi and cellularnetworks are used.

- *ZigBee:* ZigBee hardware consists of an 8-bit microcontroller combined with a small transceiver 32 KB of internal memory. Most of the ZigBee stack is provided in application specific integrated circuit (ASIC). There are three RF used for ZigBee communications.

The frequency comparison parameters are shown in Table I. The QPSK technique is more preferable for high bit-rate.

TABLE I: ZIGBEE RF COMMUNICATION BAND

Parameters	868 MHz	915 MHz	2.45 GHz
Frequency band	ISM	ISM	ISM
Location	Europe	USA,	World

		Australia	
Bit-Rate	20 kbps	40 kbps	250 kbps
Channels	1	10	16
Modulation	BPSK	BPSK	QPSK

Broadcast range for ZigBee is about 70 m. The different antennas for ZigBee are the Whip antenna, UFL RF connector & the Chip antenna, which are used in embedded system.

- *Bluetooth:* The Bluetooth [9], also known as IEEE 802.15.1, is a low cost, low power wireless radio frequency standard for short distance. The Bluetooth protocol stack is somewhat complicated in comparison with other IEEE networking stacks. It defines many components above the physical and MAC layers [14]. Bluetooth operates in the unlicensed 2.4 GHz ISM band, occupying 79 channels. The maximum data rate is up to 3 Mbps in the enhanced data rate mode.
- *UWB:* The UWB is a wireless communication technique transmits short signal pulses on a large spectrum with

high bandwidth with less power. UWB is used in wireless network over 500 MHz frequency channel. The important advantage is that it doesn't mix with other signal in same frequency channel.

- *Wi-Fi:* It stands for wireless fidelity. The 802.11a and 802.11g [12] are used up to 54 Mbps, whereas 802.11b is used up to 11 Mbps. These networks are used as WLANs. Three 802.11 standards differ in their offered bandwidth, coverage, security support and, therefore, applications. For voice, video and large size image applications in highly populated environments, 802.11a is a better choice.

TABLE II: COMPARISON OF WIRELESS TECHNOLOGY

Standard	ZigBee	Blue Tooth	UWB	Wi-Fi
IEEE-specification	802.15.4	802.15.1	802.15.3a	802.1.1 a, b, g
Frequency band	868-915 MHz 2.4 GHz	2.4 GHz 2.5 GHz	3.1-10.6 GHz	2.4 GHz (b,g)5 GHz (a)
Max Signal rate	250 Kbps	1, 3, 12 Mbps	50 - 100 Mbps	54 Mbps (a,g) 11 Mbps (b)
Nominal Range	10 – 100 m	10 m	20 m	100 m
Transmitter Power	-25 dBm	0–10 dBm	-41.3 dBm/ MHz	15-20 dBm
RF Channels	16	79	1-15	14 (2.4 GHz)
Channel Bandwidth	0.3/0.6 MHz 2 MHz	1 MHz	500 MHz-7.5 GHz	22 MHz
Modulation	BPSK (ASK), O-QPSK	GFSK	BPSK, QPSK	BPSK,QPSK COFDM-CCK
Spreading	DSSS	FHSS	DS-UWB, MB-OFDM	OFDM, DSSS with CCK
Basic cell	Tree, Mesh, ZigBee	scatter-net	Peer to peer	ESS
Cell nodes	> 65000	8	8	2007
Encryption	AES block cipher	EQ stream cipher	AES block cipher	RC4 stream cipher(WAP)
Authentication	CBS-MAS(CCM)	Share secret	CBS, MAS-CCM	WAP (802.11i)

V. HOSPITAL MANAGEMENT

The hospital management includes a hospital web server, database management, alarm section, and emergency care center. The receiver section of the system architecture is shownin Fig. 2.

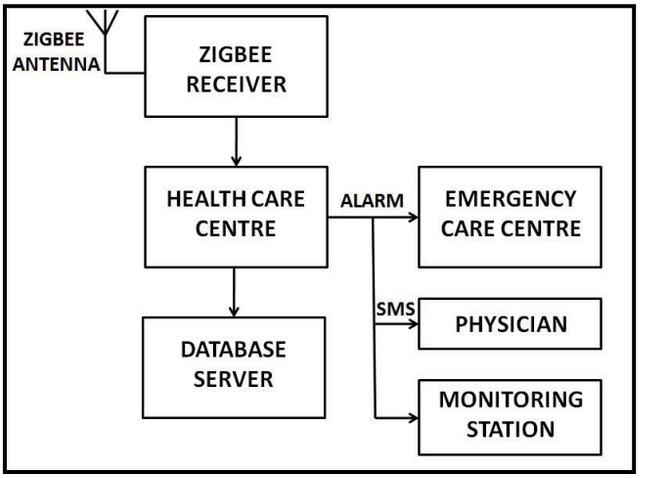

Fig. 2: System Architecture – Receiver Section

Recently proposed systems for wireless sensor networks utilize different circuit techniques and architecture approaches. Several categories of hardware designs for WSN and reference prototypes for each category can be different.

A. *Hospital Online Server*

The patients' information and health reports are saved at hospital online server. This data is helpful to detect abnormalities in patient's health. Online server helps to inform present health condition as well as send an urgent message to the doctor whenfast treatment is needed. The module is to efficiently manage the resources in the computer server.

B. *Database Management*

The current backbone is a single gateway between the motes deployed in the patients' environment [15] and the healthcare centre. The software records the patients' data in the time-based analysis. The SQL database server store data for the entire system. It is located at the monitoring station in a hospital, and stores all the information. These data may be used for medical studies and offline analysis for the physician and medical research students.

C. *Alarm Section*

Sometimes, when a patient needs an urgent treatment, the alarm is generated. The GSM module helps to send a SMS to the physician.

VI. CONCLUSIONS

The design of a health monitoring system for medical data transfer can be implemented using sensor nodes, ZigBee/ IEEE transceiver, hospital web server, database server, and personal monitor. In this paper, we have presented the global architecture of online health monitoring platform. The device ZigBee/IEEE with special attention has also been paid in wireless communications. This method can be implemented tocreate a great network, consisting of low-power wireless nodes specifically designed to sense and monitor the health of patientin applications that include chronic disease management, fitness, and aging independently. Finally, this paper describes that the ZigBee based wireless sensor networks in the health monitoring system are a great solution in medical science.

ACKNOWLEDGMENT

Authors would like to thank the management of B. S. Patel Polytechnic, Ganpat University, and Fr. C. Rodrigues Institute of Technology, Mumbai University for providing excellent facilities and sponsoring during the course of this study.

REFERENCES

[1] ZigBee Alliance, ZigBee Specifications, www.ZigBee.org

[2] IEEE, IEEE Standard 802.15.4-2003, 2003.

[3] J. C. Hou, and N. Li, "Topology construction and main- tenance in wireless sensor networks," *Handbook of Sensor Networks: Algorithms and Architectures*, John Wiley & Sons, Inc. 2005

[4] M. Hempstead, M. J. Lyons, D. Brooks, and G.-Y. Wei, "Survey of hardware systems for wireless sensor net- works," *Journal of Low Power Electronics*, ASP, vol. 4,pp. 1-10, 2008.

[5] M. Kuorilehto, M. Kohvakka, J. Suhonen, P. Hämäläinen, M. Hännikäinen, and T. D. Hamalainen, *Ultra-Low Energy Wireless Sensor Networks in Practice: Theory, Realization and Deployment*, John Wiely & Sons, 2007.

[6] M. A. M. Vieira, C. N. Coelho, D. C. da Silva, and J. M. da Mata, "Survey on wireless sensor network devices,"*Proceedings of ETFA '03*, IEEE, pp. 537-544, 2003.

[7] I. F. Akyildiz, W. Su, Y. Sankarasubramaniam, and E. Cayirci, "Wireless sensor networks: A survey," *Computer Networks*, vol. 38, pp. 393-422, 2002.

[8] Y. Chen, and X. Wang, "Design of distributed intelli- gent physiological parameter monitor system based on wireless communication technology," in *Proceedings*

of International Seminar on Future BioMedical Information Engineering, pp. 403-406, 2008.

[9] P. Bhanwat, L. Tassiulas, and R. LaMaire, "Distributed topology construction of bluetooth personal area net- works," *IEEE INFOCOM 2001*, Tel Aviv, Israel, March2000.

[10] S. Choi, H. Cha, and S. Cho, "A SoC-based sensor node: Evaluation of RETOS-enabled CC2430," in *Proceedings of the 4th Annual IEEE Communications Society Conference on Sensor, Mesh and Ad Hoc Communications and Networks*, SECON 2007, article no. 4292825, pp. 132-141, San Diego, CA, 2007.

[11] R. Fensli, E. Gunnarson, and T. Gundersen, "A wear- able ECG-recording system for continuous arrhythmia monitoring in a wireless tele-homecare situation," in *Proceedings of the 18th IEEE Symposium on Computer-Based Medical Systems*, pp. 407-412, 2005.

[12] U. Mohammad, "Performance evaluation of IEEE 802.15.4 protocol for automotive application," *IEEE Manuals*.

[13] N. Oliver, and F. Flores-Mangas, "HealthGear: A re- al-time wearable system for monitoring and analyz- ing physiological signals," *International Workshop on Wearable and Implantable Body Sensor Networks (BSN'06)*, pp. 61-64, Cambridge, MA, 3-5 April 2006.

[14] T. van Dam, and K. Langendoen, "An adaptive energy- efficient MAC protocol for wireless sensor networks," in *Proceedings of the 1st International Conference on Embedded Networked Sensor Systems*, pp. 171-180, 2003.

[15] H. F. Lopez, J. A. Afonso, J. H. Correia, and R. Simoes, "Extended health visibility in the hospital environ- ment," *BIODEVICES 2009 - Proceedings of the Second International Conference on Biomedical Electronics and Devices*, Porto, Portugal, 14-17 January 2009.

[16] Texas Instruments Datasheet [CC2431].

[17] Silabs Datasheet [EM250].

[18] Jennic Datasheet [JN5148].

[19] Freescale Datasheet [MC13213].