JOURNAL OF CRITICAL REVIEWS

ISSN- 2394-5125 VOL 9, ISSUE 05, 2022

IOT BASED AUTO ILLUMINATED SMART STREET LAMP (SSL) IN HIGHWAYS

A. Karna Rao[1], B. R. V. Pradeep[1], Ch. Pavani[1]

[1]Assistant Professor, Department of ECE

[1]Mother Teresa Institute of Science and Technology, Sanketika Nagar, Sathupally, Telangana

ABSTRACT

Automation has created a bigger hype in the electronics. The major reason for this hype is automation provides greater advantages like accuracy, energy conversation, reliability and more over the automated systems do not require any human attention. Any one of the requirements stated above demands for the design of an automated device. Energy can be effectively conserved if we can control the traffic lights on the highways by glowing them only when there is traffic on the road, and this is all most impossible to detect the arrival of a vehicle manually without the presence of light. So, in this situation we should think about a system which can sense the arrival of vehicle and ON the lights and turn OFF as soon as the vehicle leaves the area and count the vehicle in total day. The total count of the vehicles will update into IOT based thing speak server database system.

Our high-power LED based streetlight controlling system is the result of this idea. This was designed with a vehicle detecting sensor which can sense the arrival of a vehicle. It drives the same information to a micro controller using internet of things we update everything into government websites immediately for status... The micro controller is interfaced with the streetlights and the total count of the vehicles will update into IOT. It is the responsibility of the controller to switch the status of the lights with respect to the acknowledgement received to it from the vehicle sensor and post into IOT. The major advantage of the device is it not only controls the intensity of the light as well as power saving on highways.

This work consists of a group of measuring stations in the street (one station located in each lamppost) and a base station located nearby. The measuring stations are used to observe street conditions as the intensity of daylight and, depending on the conditions they activate or off the lamps. For these reasons every lamp is designed independent to decide about the activation of light. The base station conjointly checks if any lamp is correctly operating and sends the information using the wireless network IOT.

1. INTRODUCTION

The main objective of the intelligent city is to improve the protection, convenience, and convenience of operations and to conserve resources. To foster intelligent cities, an urban infrastructure is also more intelligent. As an integral part of the city's urban infrastructure, the streetlamp is closely related to protection and energy conservation. Today, without streetlights it is difficult to imagine how the city looks like. But in such a situation, theft and robbery are likely to seriously increase. it is easy to predict. In addition, the existing streetlamp management needs to be streamlined due to its high energy level on day-by-day usage. Today, the key drawbacks of the streetlamps are manual administration or the light perception controls:

1) Long cycle of servicing. Both manual management and monitoring of light perception take manual patrols to control broken streetlamps. The maintenance cycle is therefore too long, and it can be much longer than a few months, particularly for the suburban streetlamps. However, the risk increases only

ISSN- 2394-5125 VOL 9, ISSUE 05, 2022

after the streetlight is disabled, so more accidents, robbery and theft may occur. 2) Hard management of fine grain. Manual management is clearly not intelligent enough and can be managed with difficulty in real time. In addition, one switch is used to control several streetlamps at the same time to simplify manual management. The versatility is nearly restricted for light perception control. Real-time controls and remote controls are not included in the latest management systems. 3) High use of energy. There are only two states nowadays streetlights, off and on. Furthermore, their brightness cannot be changed. Therefore, excess energy is consumed. The streetlamps may often be dim to conserve energy. 4) Easy robbery. No efficient way to avoid streetlamps from being steeled exists. There are many streetlamps, so all of them cannot be always regulated. stop robbing, streetlamps can track themselves. A new generation of streetlamps must boost their efficiency by incorporating the following features to optimize the above-mentioned drawbacks in developing smart cities: 1) Minimize service life. One of the most significant maintenance cycles is major smart city criteria. The maintenance cycle must therefore be minimized to the extent possible. A mechanism must be given to verify in real time broken lamps. 2) Complement the management of fine grain. There are few parts to fine grain controls: first each streetlamp requires its own identity to differentiate between it; secondly, each streetlamp should be controlled independently; third, all streetlamps should be tested continuously. 3) Reduce the consumption of electricity. The luminous the streetlamp, the more energy is used. However, energy consumption can decrease by changing the dynamic light intensity according to current demands. 4) A self-sufficient warning to deter robbery. Each streetlamp must have the capacity to protect itself. If robbed, it can give a warning autonomously. This will prevent the theft of the streetlamp. In this article we propose to satisfy all of the above four skills a streetlamp management system (SLMS) based on fog computing. The proposed SLMS consists of three main parts: an intelligent streetlamp that can change light brightness, an independent warning that reports on suspicious activity, and an effective network used to communicate in real time between managers and bulky streetlamps; and finally, a simple and highly automated, scalable management platform. In the proposed SLMS, the key contributions are: 1) the hybrid network will be implemented, and the Narrow Band Internet of Things (NB-IoT) will be used for the real-time communication between servers and broad streetlamps. 2) A versatile management platform is in place to alert managers of the broken streetlamps in real time and to restore broken streetlamps automatically by the maintenance personnel; 3) The states can be mapped in real-time for all streetlamps. The basic firmware for the microcontroller is written in Embedded C language and compiling is done using ARDUINO complier. The compiler generates the Hex code for the microcontroller and the Hex code is stored /programmed in flash memory of micro controller. An embedded system is a combination of software and hardware to perform a dedicated task. Some of the main devices used in embedded products are Microprocessors and Microcontrollers. Microprocessors are commonly referred to as general purpose processors as they simply accept the inputs, process it and give the output. In contrast, a microcontroller not only accepts the data as inputs but also manipulates it, interfaces the data with various devices, controls the data and thus finally gives the result. The “IOT SMART STREET LIGHT “can be done using ARDUINO microcontroller which automatically switches the streetlights ON depending on the Vehicle presence.

Automation has created a bigger hype in the electronics. The major reason for this hype is automation provides greater advantages like accuracy, energy conversation, reliability and more over the automated systems do not require any human attention. Any one of the requirements stated above demands for the design of an automated device. Energy can be effectively conserved if we can control the traffic lights on the highways by glowing them only when there is traffic on the road, and this is all most impossible to detect the arrival of a vehicle manually without the presence of light. a smart

ISSN- 2394-5125 VOL 9, ISSUE 05, 2022

streetlamp (SSL) based on the fog computing for smarter cities is proposed in this paper. Smart cities deliver great advantages both in terms of protection and energy efficiency. The city streetlamp is connected to both energy conservation and protection. The streetlight is therefore a critical part of intelligent cities. However, today's streetlamps lack intelligent features that increase both danger and energy consumption. A Street Light Management System (SLMS) focused on fog computing for smarter cities. It drives the same information to a micro controller using internet of things we update everything into government websites immediately for status. It is the responsibility of the controller to switch the status of the lights with respect to the acknowledgement received to it from the vehicle sensor and post into LCD. The major advantage of the device is it not only controls the intensity of the light as well as power saving on highways. This work consists of a group of measuring stations in the street (one station located in each lamppost) and a base station located nearby. The measuring stations are used to observe street conditions as the intensity of daylight and, depending on the conditions they activate or off the lamps. For these reasons every lamp is designed independent to decide about the activation of light.

2. LITERATURE SURVEY

S. Kamoji et al. (2020). [1] The method implemented is standardized, with modules: LED module and PIR, LDR, Emission Detector and the camera. The framework is a modular design. In the lack of motion and if the ambient light is sufficient, the brightness of the lights is decreased. The machine driver assistance module recognizes the expelled cars by recognizing the number plate. The recognition number plate was carried out with RCNN and some techniques for the analysis of images. Pollution levels can be detected and registered by the pollution sensor around the streetlamps. These data allow us to generate a city heat map of pollution and to identify areas that congested high frequency. A docking point for charging electric cars, which is a prepayment facility, is provided on a light pole. Y. Xue et al. (2020). [2] A smart dimming model based on the neural network is drawn up in this paper. The system will analyze road information submitted by the sensor layer, and output the dimming signal, enhancing the effectiveness of a flow control and a nerve network. The test results showed that the model is more environmentally friendly and compatible with naked eye in contrast to the conventional approach. H.Ibrahim et al. (2020). [3] The study explores efforts to focus on the idea of using load pressure from the transport route junction by means of mobile vehicles to peat lands and transform it into electric energy using a ramp coupled with piston-spring pressure control and Piezoelectric equipment. Junjian He et al. (2019). [4] This study analyses the Wireless Sensor Network (WSN) intelligent road lighting system and the useless decision-making process. this paper. The system captures metrics of the traffic conditions through WSN and implements versatile rules to smartly change the light on the road. The evidence shows that this paper's sophisticated streetlamp management system can intelligently control and light streetlights on-demand, dramatically reduce energy usage and increase streetlamp support and storage quality. M. Durgun et al. (2019). [5] The suggested street lighting offers special lighting depending on the region of illumination. The bulb can be tracked for light, location, and fault conditions. For different illumination situations, variable structure techniques have been suggested. The proposed device, because of its practicality and effectiveness, is expected to provide a revolutionary solution for current lighting problems. Sunhuang Chi et al. (2019). [6] This report contains and implements a highly tuned access control mechanism (includes high competitiveness, high availability, and high scalability) for urban streetlamp IoT. And the test findings support the methodology reported in this article, which has enhanced stability and access to thousands or even millions of street lighting systems. Y. Sarr et al. (2019). [7] This paper provides a practical deployment of a vast intelligent street lighting platform that provides solar light stations to control streetlamps dynamically. When only one access point is implemented due to

ISSN- 2394-5125 VOL 9, ISSUE 05, 2022

collisions, simulation findings indicate a high rate of packet loss. The results show that multiple LoRa network gateways obtain a higher packet distribution ratio and low consumption of energy. W. A. Jabbar et al. (2019). [8] The work has proposed an intelligent environmentally green street light system for the efficient use of renewable energy sources and energy conservation (SG Street-LS). The proposed system creates powerful concepts and concepts that allow streetlights to function safely and quickly depending on the availability of illumination and movement detection by using RF wireless connectivity controls based in Arduino. N. T. Tung et al. (2019). [9] This review deals with both the formulation and management of an intelligent street lighting system dependent on LED light and wireless Lora interaction. D. Tukymbekov et al. (2019). [10] This article deals with an automated public lighting device with an energy-efficient predictive algorithm. The work is connected to the control of the device using algorithms which can supply each lamp during the night. M. Hossain et al. (2019). [11] This article contains and shows a unique Led Street Lighting Device for Bangladesh regulated Smart Autonomous Power and Turn. S. Bruno et al. (2019). [12] This work provides preliminary findings of a continuing architecture research work to incorporate public road light strategies based on LEDs into other intelligent urban infrastructure and services. The article outlines the overall smart grid design of many devices, including renewable power generation, energy storage, charging stations and lights based on LEDs. A. Jha (2019). [13] This report outlines the major features of an 80W smart LED carrier that functions in 6LoWPAN connectivity.

3. EXISTING SYSTEM

Industry of road lighting frameworks are developing quickly and going with fast development of industry and urban areas. Mechanization, Power utilization and Cost Effectiveness are the imperative contemplations in the present field of gadgets and electrical related advances. To administer and keep up complex road lighting frame of reference even more financially, different road light control frameworks are created. These frameworks are created to control and diminish vitality utilization of a town's open lighting framework utilizing distinctive advancements. The current work utilizes the high-power release light (HID). Stowed away by and utilized for urban road light and is dependent on rule of gas release. The existing system possess the main disadvantage of want of people to turn off and on the streetlights to hand-operate which, requires formidable human competency to monitor the process. Also, we need to check regularly weather all the streetlights are functioning properly or not. If the streetlights stop functioning properly many accidents may occur. So regular monitoring of streetlights is also required. We propose a contemporary method of which reduces cost, human potential, and energy consumption.

4. PROPOSED SYSTEM

This proposed street light intensity control monitoring work we are going to measure the fog on road and street light auto intensity control system for that we use input modules LDR for detect light , LCD for display for everything. Relay controls the led brightness all are integrated to micro controller Arduino which is powered by power supply. . A Street Light Management System (SLMS) focused on fog computing for smarter cities. DHT11 module which detects the temperature and fog intensity levels on the street road. This data will give to micro controller and displayed by LCD module. LDR sensor which detects the light. Depending on the light intensity the streetlights automatically turn ON and OFF depending on the day and night modes.

Advantages

1. This system helps in energy conservation.
2. This system eliminates manual switching of streetlights.

ISSN- 2394-5125 VOL 9, ISSUE 05, 2022

3. Efficient and low-cost design.
4. Low power consumption.
5. Easy to operate.
6. Fog computing

Applications

This system can be practically implemented in real time to switch the streetlights automatically without manual switching.

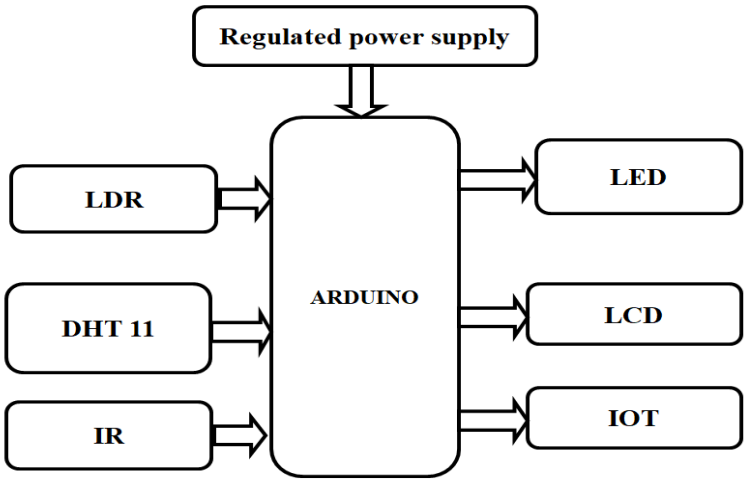

Figure 1. Proposed system of block diagram.

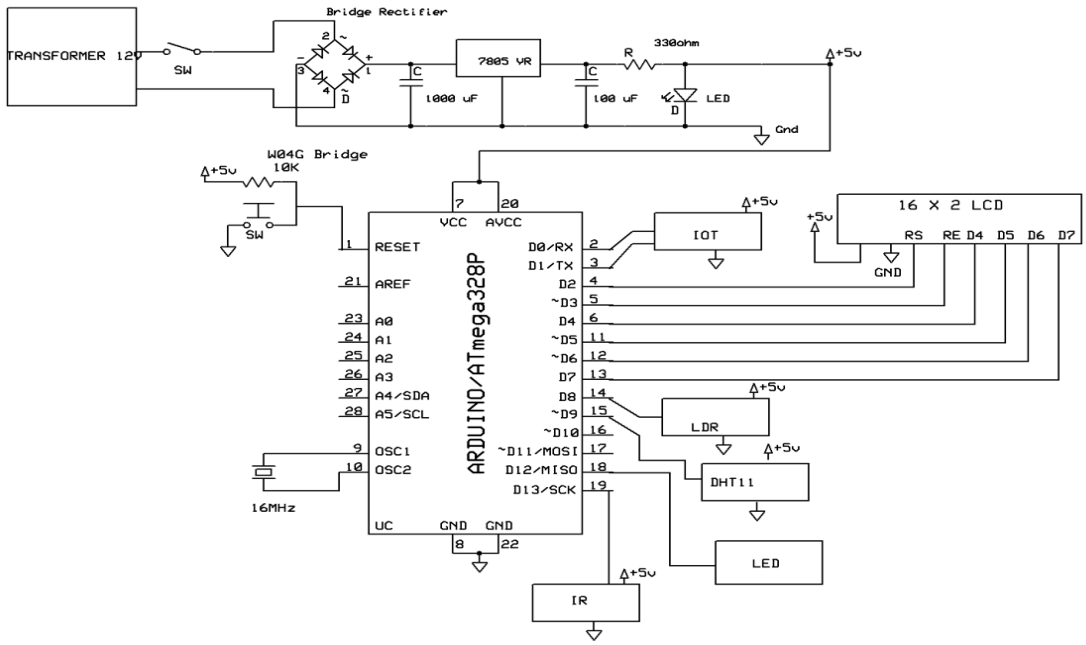

Figure 2. Schematic Diagram of Proposed System

ISSN- 2394-5125 VOL 9, ISSUE 05, 2022

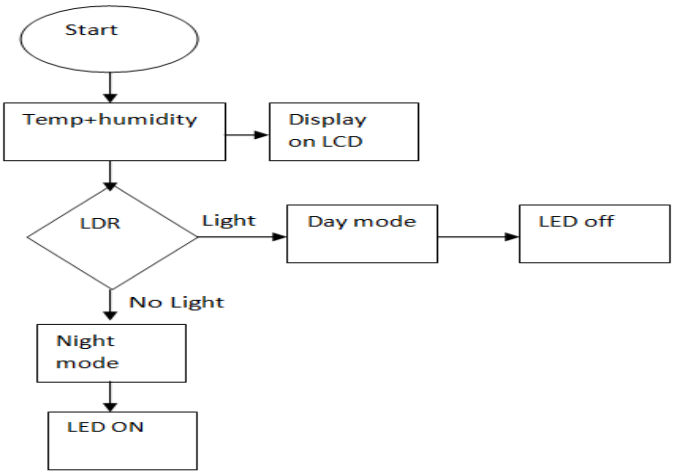

Figure 3. Flowchart of proposed system.

5. RESULT

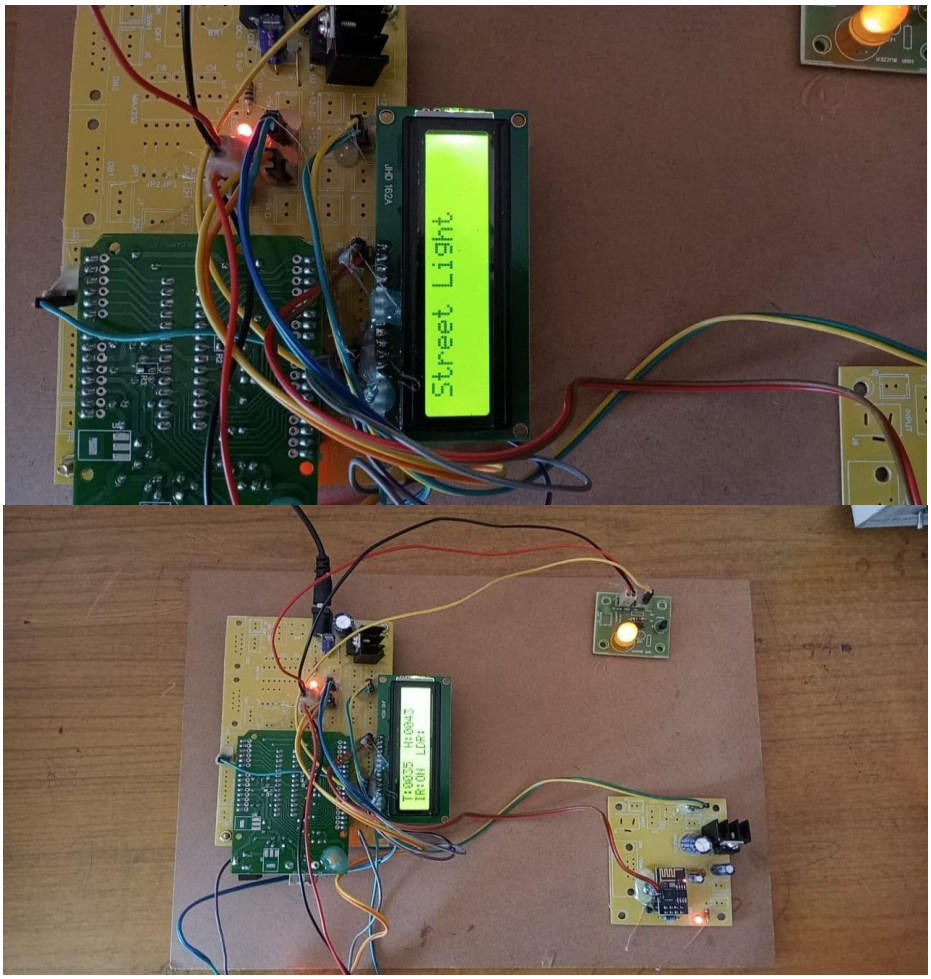

ISSN- 2394-5125 VOL 9, ISSUE 05, 2022

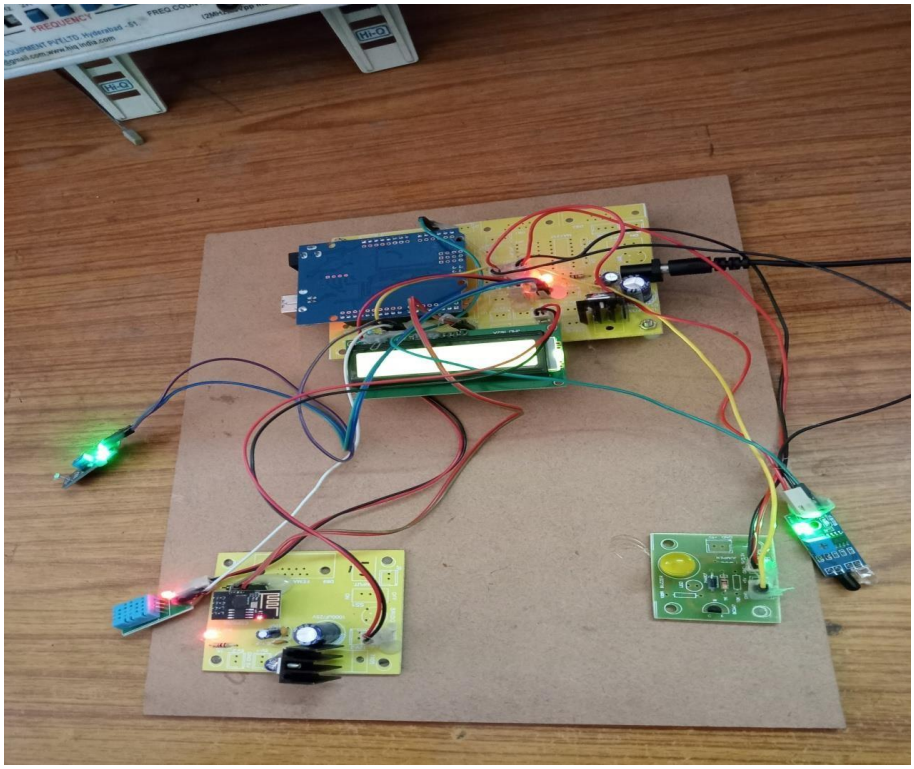

6. CONCLUSION

We developed a management framework with a server focused on fog computing. This paper proposes a smart streets lamp (SLMS) based on fog computing to meet the requirements of smart cities. SLMS consists primarily of the following three parts: 1) intelligent sensor lamp (streetlamp brightness can be changed and autonomous alerts about lamp abnormality. Integrating features of all the hardware components used have been developed in it. Presence of every module has been reasoned out and placed carefully, thus contributing to the best working of the unit. Secondly, using highly advanced IC's with the help of growing technology, the work has been successfully implemented. Thus, the work has been successfully designed and tested. Our work **"SMART STREET LIGHT**" is mainly intended reduce the wastage of energy due to continuous ON of streetlights even though vehicle leaves the area.

Future Scope

This work can be extended using GSM. To measure vehicle, count as well as speed of the vehicles on street roads. GSM module will send the information regarding the vehicle speed and count, the status of streetlights to the respective authorities.

REFERENCES

1. Archana. G, Aishwarya N, Anitha J "Intelligent Street Light System" International Journal of Recent Advances in Engineering & Technology,
2. Vol-3, Issue-4, 2015.
3. AkshayBalachandran, Murali Siva, V. Parthasarathi, Surya and Shriram K. Vasudevan "An Innovation in the Field of Street Lighting System
4. with Cost and Energy Efficiency"Indian Journal of Science and Technology,*Vol-8, August 2015*

5. DeepanshuKhandelwal, Bijo M Thomas, KritikaMehndiratta, Nitin Kumar "Sensor Based Automatic Street Lighting system" International
6. Journal of Education and Science Research Review Volume-2, Issue-2 April- 2015.
7. IsahAbdulazeez Watson, OshomahAbdulaiBraimah, Alexander Omoregie "Design and Implementation of an Automatic Street Light Control
8. System" International Journal of Emerging Technology and Advanced Engineering, Volume 5, Issue 3, March 2015
9. KapseSagar Sudhakar1, AbhaleAmol Anil2, Kudakechetan Ashok3, ShirsathShravan Bhaskar4 "Automatic Street Light Control System"
10. International Journal of Emerging Technology and Advanced Engineering"Volume 3, Issue 5, May 2013
11. Mustafsaad, AbdalhalimFarij, Ahamed Salah "Automatic Street Light Control System Using Microcontroller" Mathematical method and
12. Optimization Technique in Engineering ISBN: 978-960-474-339-1.
13. SaksheeSrivastava, "Electronics And Communication Engineering, Institute Of Technology And Management AL-1, Sector-7, GIDA,