JOURNAL OF CRITICAL REVIEWS

ISSN- 2394-5125 VOL 08, ISSUE 05, 2021

Crude Oil Price Prediction using Deep Learning Model

Yashwanth Reddy Algubelly,Umarani Koppula

Department of Computer Science and Engineering

Sree Dattha Group of Institutions, Hyderabad, Telangana, India.

ABSTRACT

With the popularity of the deep learning model in the engineering fields, it has attracted significant research interests in the economic and finance fields. In this project, we use the deep learning model to capture the unknown complex nonlinear characteristics of the crude oil price movement. We further propose a new hybrid crude oil price forecasting model based on the deep learning model. Using the proposed model, major crude oil price movement is analyzed and modelled. The performance of the proposed model is evaluated using the price data in the WTI crude oil markets. The empirical results show that the proposed model achieves the improved forecasting accuracy.

Keywords: Deep learning, Crude oil, Crude oil price.

1. INTRODUCTION

The crude oil price movements are subject to diverse influencing factors. The dynamic complicated interactions among these factors result in the mysterious behaviour of the crude oil price movement, whose characterization and prediction remained one of the most interesting and intriguing research issues in the economic and financial analysis field. Recently numerous empirical studies have revealed the nonlinear nature of economic and financial data, where traditional methods such as linear prediction methods are not able to analyze the complex nonlinear dynamics involved [1]. [2] used the Qual VAR model to model the nonlinear autocorrelation characteristics of WTI crude oil price changes and forecast its future movement. They found that the Qual VAR model outperforms the benchmark Random Walk and VAR model. [3] proposed a Hidden Markov Model (HMM) with threshold effect to model hidden factors influencing the crude oil price movement. They demonstrated that the proposed models outperform the ARMA model, in h-day ahead forecasting exercise. On the other hand, the Artificial Intelligence (AI) and Machine Learning (ML) based approaches received more and more research interests. [4] Used the Recurrent Neural Network (RNN) to forecast the crude oil indices. [5] Proposed a Genetic Algorithm optimized Neural Network model to forecast the crude oil price fluctuations. They showed this evolutionary neural network model brings statistically significant performance improvement. [6] Provided a comprehensive survey on the AI and ML based crude oil forecasting models.

The deep learning model is a new artificial intelligence paradigm developed beyond the neural network. It has become a popular phenomenon in the computer science and engineering fields such as image recognition, text classification and speech recognition recently. For example, [7] proposed HMM-DNN model for speech synthesis method. In addition to the HMM-DNN model, the CNN model and the RNN model are also applied to the construction of speech recognition models. However, the deep learning model has only been introduced to the financial field quite recently. There are some very early exploratory attempts. For example, [8] proposed a deep learning hierarchical decision model and used it to construct new portfolio with the desired level of performance. Empirical studies show that the proposed model achieves the superior performance.[9] predicted the real estate price by combining the Boltzmann machine with the genetic algorithm. [10] applied the convolution neural network to the biological aspects of DNA-protein transcription prediction. [11] used the deep belief network model to predict the short-term power load in Macedonia from 2008 to 2014. The

empirical results showed that the deep belief network model has obvious advantages compared with the traditional forecasting models.

In this project, we propose a new deep learning-based hybrid crude oil price forecasting methodology to model the nonlinear dynamics involved in the crude oil price movement and forecast its future movement at higher level of accuracy. Considering both the linear and non-linear characteristics of historical data, we integrate the prediction results of the ARMA model and the prediction results of the deep learning model. Empirical studies have been conducted using the major crude oil prices to evaluate the performance of the proposed model. The superior performance of the crude oil price forecasting model using the deep belief network and recurrent neural network provide the empirical evidence that the market is inefficient in the regional and submarkets. Work in this paper shows methodologically the merit of the deep learning model in tracking and capturing the nonlinearity and dynamic crude oil price movement. When analytic solutions are lacking, it would provide the best approximation to the nonlinear dynamics in the crude oil price movement. It contributes to the literature by providing a new methodology on how the deep learning model can be used to improve the crude oil forecasting accuracy.

2. LITERATURE SURVEY

Monthly Energy Review; U.S. Energy Information Administration. Available online: https://www.eia.gov/ total energy/data/monthly/index.php (accessed on 10 February 2020).

Note 1. Merchandise Trade Value. Imports data presented are based on the customs values. Those values do not include insurance and freight and are consequently lower than the cost, insurance, and freight (CIF) values, which are also reported by the Bureau of the Census. All exports data, and imports data through 1980, are on a free alongside ship (f.a.s.) basis. “Balance” is exports minus imports; a positive balance indicates a surplus trade value and a negative balance indicates a deficit trade value. “Energy” includes mineral fuels, lubricants, and related material. “Non-Energy Balance” and “Total Merchandise” include foreign exports (i.e., re-exports) and nonmonetary gold and U.S. Department of Defense Grant- Aid shipments. The “Non-Energy Balance” is calculated by subtracting the “Energy” from the “Total Merchandise Balance.” “Imports” consist of government and nongovernment shipments of merchandise into the 50 states, the District of Columbia, Puerto Rico, the U.S. Virgin Islands, and the U.S. Foreign Trade Zones. They reflect the total arrival from foreign countries of merchandise that immediately entered consumption channels, warehouses, the Foreign Trade Zones, or the Strategic Petroleum Reserve. They exclude shipments between the United States, Puerto Rico, and U.S. possessions, shipments to U.S. Armed Forces and diplomatic missions abroad for their own use, U.S. goods returned to the United States by its Armed Forces, and in-transit shipments. Note 2. Non-Combustion Use of Fossil Fuels. Most fossil fuels consumed in the United States and elsewhere are combusted to produce heat and power. However, some are used directly for non-combustion use as construction materials, chemical feedstock, lubricants, solvents, and waxes. For example, coal tars from coal coke manufacturing are used as feedstock in the chemical industry, for metallurgical work, and in anti-dandruff shampoos; natural gas is used to make nitrogenous fertilizers and as chemical feedstock’s; asphalt and road oil are used for roofing and paving; hydrocarbon gas liquids are used to create intermediate products that are used in making plastics; lubricants, including motor oil and greases, are used in vehicles and various industrial processes; petrochemical feedstock’s are used to make plastics, synthetic fabrics, and related products.

Saggu, A.; Anukoonwattaka, W. Commodity Price Crash: Risks to Exports and Economic Growth in Asia-Pacific LDCs and LLDCs. United Nations ESCAP Trade Insights 2015, 6, 2617542.

This issue of the Trade Insights series identifies Asia-Pacific LDCs and LLDCs with export-portfolios and economies which are at greatest risk from the recent collapse in global commodity prices. Asia-Pacific LDCs and LLDCs account for less than 2% of global commodity exports and just 7% of Asia-Pacific commodity exports; however, many these economies have export-portfolios which are highly concentrated in one or two major commodities: mainly crude oil, natural gas, aluminum, iron ore/steel, cotton and copper. This note finds that economic growth is at significant risk from changes in commodity prices across many Asia-Pacific LDCs and LLDCs, particularly in fuel-exporting economies and metal and mineral exporting economies.

Chatzis, P.S.; Siakoulis, V.; Petropoulos, A.; Stavroulakis, E.; Vlachogiannakis, N. Forecasting stock market crisis events using deep and statistical machine learning techniques. Expert Syst. Appl. 2018, 112, 353–371.

Predictions of stock and foreign exchange (Forex) have always been a hot and profitable area of study. Deep learning applications have been proven to yield better accuracy and return in the field of financial prediction and forecasting. In this survey, we selected papers from the Digital Bibliography & Library Project (DBLP) database for comparison and analysis. We classified papers according to different deep learning methods, which included Convolutional neural network (CNN); Long Short-Term Memory (LSTM); Deep neural network (DNN); Recurrent Neural Network (RNN); Reinforcement Learning; and other deep learning methods such as Hybrid Attention Networks (HAN), self-paced learning mechanism (NLP), and Wavenet. Furthermore, this paper reviews the dataset, variable, model, and results of each article. The survey used presents the results through the most used performance metrics: Root Mean Square Error (RMSE), Mean Absolute Percentage Error (MAPE), Mean Absolute Error (MAE), Mean Square Error (MSE), accuracy, Sharpe ratio, and return rate. We identified that recent models combining LSTM with other methods, for example, DNN, are widely researched. Reinforcement learning and other deep learning methods yielded great returns and performances. We conclude that, in recent years, the trend of using deep-learning-based methods for financial modeling is rising exponentially.

[4]Koch, N.; Fuss, S.; Grosjean, G.; Edenhofer, O. Causes of the EU ETS price drop: Recession, CDM, renewable policies or a bit of everything?–New evidence. Energy Policy 2014, 73, 676–685

This paper examines the usefulness of asset prices in predicting the beginnings of recessions in the G-7 countries. It finds that equity/house price drops have a substantial marginal effect on the likelihood of a new recession. Increased market uncertainty, which is a second-moment variable associated with equity price changes, is also a useful predictor of new recessions in these countries. These findings are robust to the inclusion of the term spread and oil prices. The new recession forecasting performance of our baseline model is superior to that of a similar model estimated over all recession and expansion periods, highlighting a difference between the probabilities of a new recession versus a continuing recession.

[5] Baumeister, C.; Kilian, L. Forecasting the real price of oil in a changing world: A forecast combination approach. J. Bus. Econ. Stat. 2015, 33, 338–351.

The U.S. Energy Information Administration (EIA) regularly publishes monthly and quarterly forecasts of the price of crude oil for horizons up to 2 years, which are widely used by practitioners. Traditionally, such out-of-sample forecasts have been largely judgmental, making them difficult to replicate and justify. An alternative is the use of real-time econometric oil price forecasting models. We investigate the merits of constructing combinations of six such models. Forecast combinations have received little attention in the oil price forecasting literature to date. We demonstrate that over the last 20 years suitably constructed real-time forecast combinations would have been systematically

more accurate than the no-change forecast at horizons up to 6 quarters or 18 months. The MSPE reductions may be as high as 12% and directional accuracy as high as 72%. The gains in accuracy are robust over time. In contrast, the EIA oil price forecasts not only tend to be less accurate than no-change forecasts, but are much less accurate than our preferred forecast combination. Moreover, including EIA forecasts in the forecast combination systematically lowers the accuracy of the combination forecast. We conclude that suitably constructed forecast combinations should replace traditional judgmental forecasts of the price of oil.

3. PROPOSED SYSTEM

3.1 Long short-term memory (LSTM) RNN in TensorFlow

Long short-term memory (LSTM) is an artificial recurrent neural network (RNN) architecture used in the field of deep learning. It was proposed in 1997 by **Sepp Hochreiter** and **Jurgen schmidhuber**. Unlike standard feed-forward neural networks, LSTM has feedback connections. It can process not only single data points (such as images) but also entire sequences of data (such as speech or video).

For example, LSTM is an application to tasks such as unsegmented, **connected handwriting recognition,** or **speech recognition**.

A general **LSTM** unit is composed of a cell, an input gate, an output gate, and a forget gate. The cell remembers values over arbitrary time intervals, and three gates regulate the flow of information into and out of the cell. LSTM is well-suited to classify, process, and predict the time series given of unknown duration.

Long Short- Term Memory (LSTM) networks are a modified version of recurrent neural networks, which makes it easier to remember past data in memory.

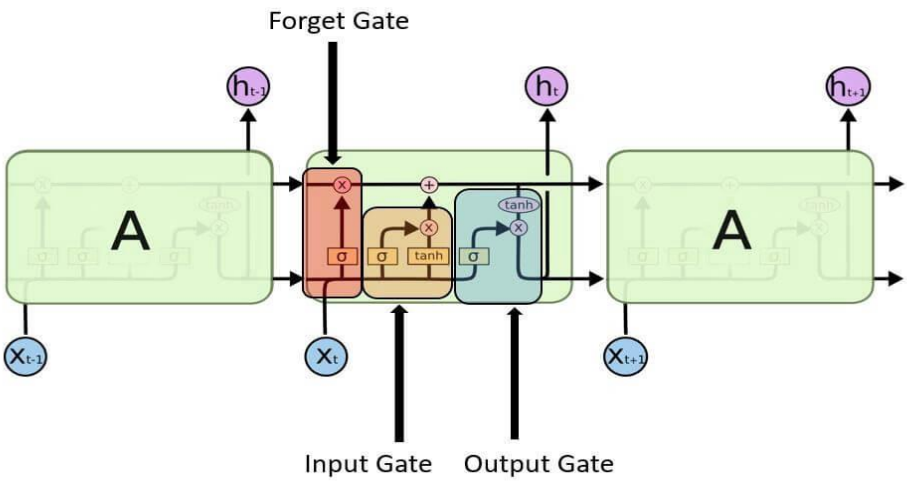

Fig. 1: A general LSTM network.

1. Input gate- It discover which value from input should be used to modify the memory. **Sigmoid** function decides which values to let through 0 or 1. And **tanh** function gives weightage to the values which are passed, deciding their level of importance ranging from **-1** to **1**.

$$i_t = \sigma(W_i.[h_t - 1, x_t] + bi)$$
$$C_t = \tanh(W_C.[h_t - 1, x_t] + b_C)$$

2. Forget gate- It discover the details to be discarded from the block. A sigmoid function decides it. It looks at the previous state **(ht-1)** and the content input (Xt) and outputs a number between 0(omit this) and 1(keep this) for each number in the cell state **Ct-1**.

$$f_t = \sigma(W_f.[h_t - 1, x_t] + b_f)$$

3. Output gate- The input and the memory of the block are used to decide the output. Sigmoid function decides which values to let through 0 or 1. And **tanh** function decides which values to let through 0, 1. And tanh function gives weightage to the values which are passed, deciding their level of importance ranging from **-1 to 1** and multiplied with an output of **sigmoid**.

$$O_t = \sigma(W_o[h_t - 1, x_t] + b_o$$
$$h_t = o_t * \tanh(C_t)$$

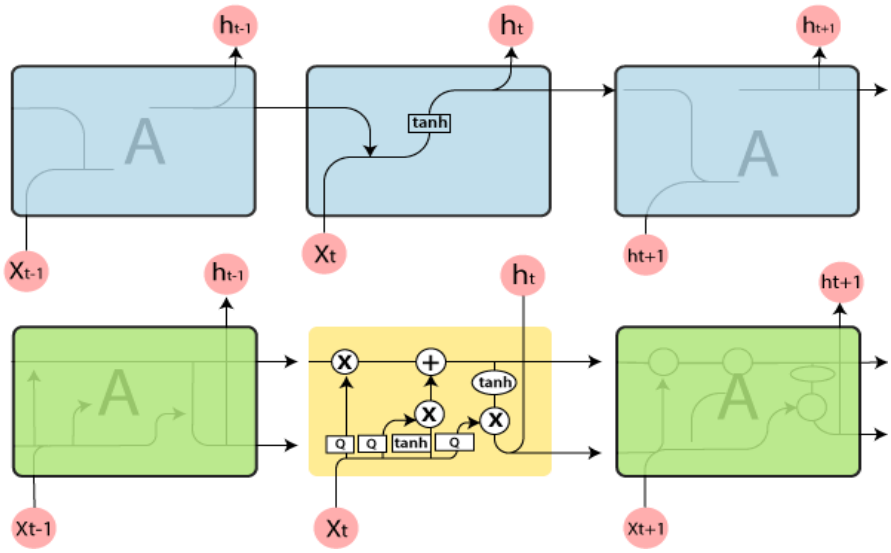

Fig. 2: A full RNN cell.

It represents a full RNN cell that takes the current input of the sequence xi, and outputs the current hidden state, hi, passing this to the next RNN cell for our input sequence. The inside of an LSTM cell is a lot more complicated than a traditional RNN cell, while the conventional RNN cell has a single "internal layer" acting on the current state (ht-1) and input (xt).

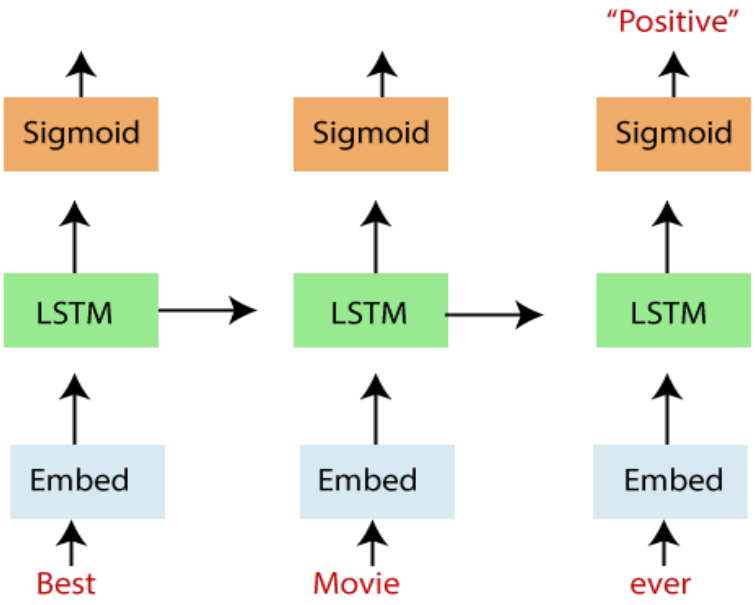

Fig. 3: Unrolled LSTM network with an embedding layer.

In the above diagram, we see an "unrolled" LSTM network with an embedding layer, a subsequent **LSTM** layer, and a sigmoid activation function. We recognize that our inputs, in this case, words in a movie review, are input sequentially.

The words are inputted into an embedding lookup. In most cases, when working with a corpus of text data, the size of the vocabulary is unusually large.

This is a multidimensional, distributed representation of words in a vector space. These embeddings can be learned using other deep learning techniques like **word2vec**; we can train the model in an end-to-end fashion to determine the embedding as we teach.

These embeddings are then inputted into our **LSTM layer**, where the output is fed to a sigmoid output layer and the **LSTM cell** for the next word in our sequence.

3.2 SYSTEM ARCHITECTURE

This model is used for time series prediction and analysis and forecasting. It contains four methods and is proposed by Box and Jenkins. The following are the four steps used in the ARIMA model.

- Stage-1: Identification of a series of responses is done in the first stage which is used in calculating the time series and autocorrelations using statement IDENTIFY.
- Stage-2: In this stage Estimation of the previously identified variables is done and also the parameters are estimated using the statement ESTIMATE.
- Stage-3: Diagnostics checking of the above-collected variables and parameters is done in this stage.
- Stage-4: In this stage the predicting values of time series are forecasted which are future values, using the ARIMA model using the statement FORECAST. The parameters used in this model are p, d, q which describes 'p' as the number of lag observations, 'q' as the degree of differencing and' as the moving average order.

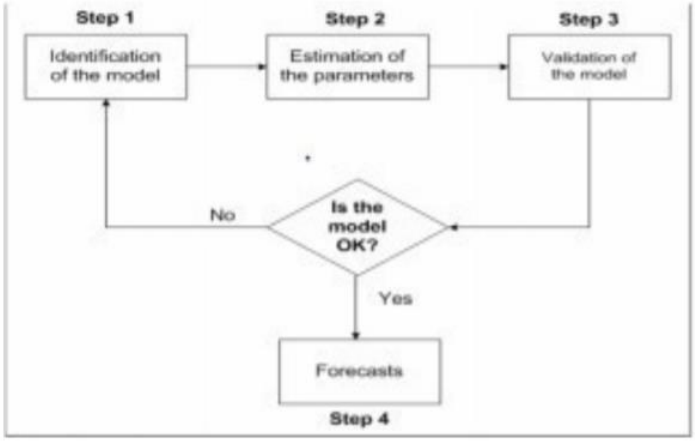

Fig. 4: System architecture.

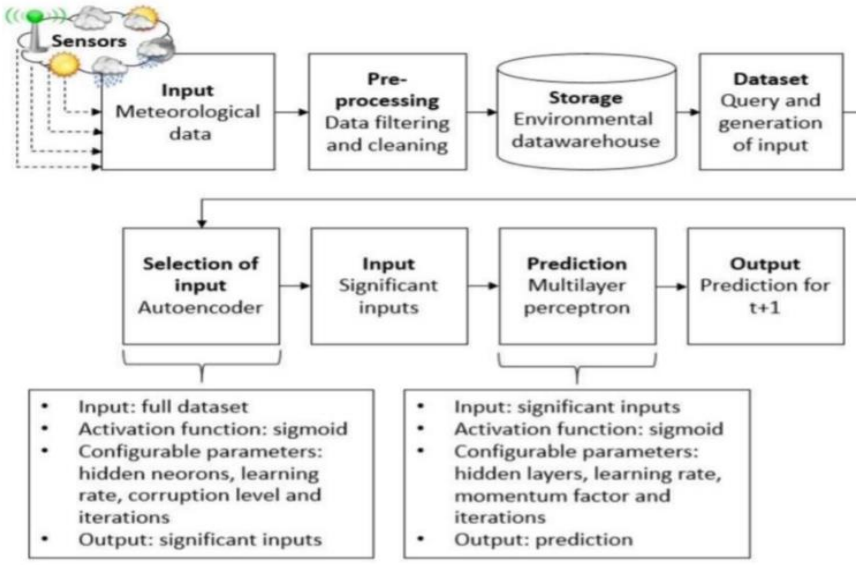

Fig. 5: Flow of architecture**.**

4. RESULTS

This project employs2 deep learning algorithms such as LSTM (Long Short-Term Memory Network), and ARMA to forecast crude oil prices. LSTM algorithm is a deep learning famous algorithms used to train and predict any kind of data such as voice recognition, image classification or data classification, this algorithm consist of three layers called input, output, forget layer and at input layer algorithm will read features from dataset and find out best features and saved that best features in output layer and this process continue to filter features between input and output layer and if best output found then assign it current output and old output will be assigned to forgot layer. Final filtered features will be used to train model. While prediction algorithm accepts test data and then apply that test data on train model to predict accurate class to which this test data belongs. ARMA algorithm will also use for same training and testing model, but its accuracy of prediction is less compare to LSTM. In this project we are using historical crude oil prices from QUANDL website as dataset and this dataset saved inside ‘dataset’ folder. This dataset contains two values such as DATE and price value.

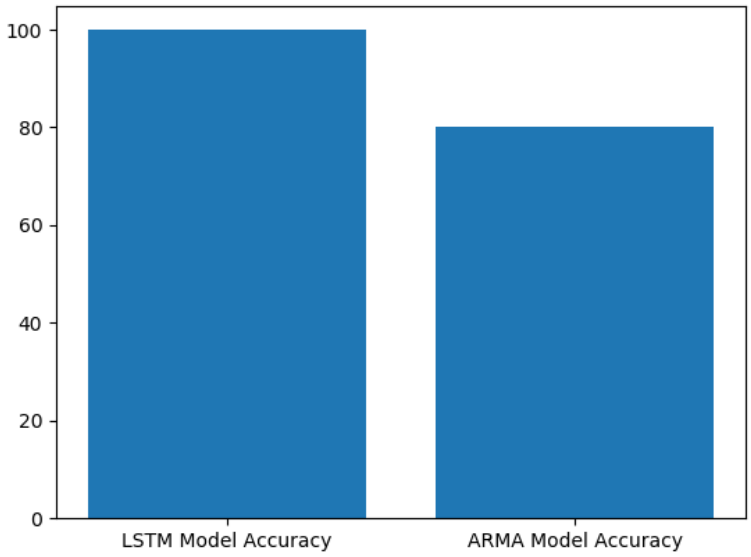

Fig. 6: Performance comparison of accuracy.

5. CONCLUSION

In this paper, we apply the emerging deep learning model to the crude oil price forecast. More specifically we identified two particular deep learning models, i.e., the deep belief network and the recurrent neural network, to be useful in modeling the nonlinear dynamics in the crude oil price movement. We construct a hybrid model that combines the forecasts from ARMA model as well as the forecasts from the deep learning models. We have conducted the empirical studies using the representative WTI crude oil market. We found the introduction of Deep Learning model in the crude oil price models lead to the improved forecasting accuracy. Work in this paper implies that there is exploitable forecasting opportunity in the crude oil price movement. More accurate modeling of the nonlinear dynamics in the crude oil price movement is critical to the further understanding of the determinant underlying the crude oil price movement. In the meantime, we found that the performance of the deep learning model is very sensitive to the parameters. Increasing model complexity with more hidden layers and hidden neurons may not necessarily lead to higher level of nonlinear modeling accuracy. This performance constraint may be attributed to the limited types of deep learning model attempted. It merits further research in constructing some innovative forecasting models based on different types of deep learning models.

REFERENCES

[1] F. Shen, J. Chao, J. Zhao, forecasting exchange rate using deep belief networks and conjugate gradient method, Neurocomputing 167 (2015) 243 – 253.

[2] R. Gupta, M. Wohar, forecasting oil and stock returns with a qual var using over 150 years off data, Energy Economics 62 (2017) 181–186.

[3] D. M. Zhu, W. K. Ching, R. J. Elliott, T. K. Siu, L. M. Zhang, Hidden markov models with threshold effects and their applications to oil price forecasting, Journal of Industrial and Management Optimization 13 (2) (2017) 757–773.

[4] J. Wang, J. Wang, Forecasting energy market indices with recurrent neural networks: Case study of crude oil price fluctuations, Energy 102 (2016) 365–374.

[5] H. Chiroma, S. Abdulkareem, T. Herawan, Evolutionary neural network model for west texas intermediate crude oil price prediction, Applied Energy 142 (2015) 266 – 273.

[6] H. Chiroma, S. Abdul-kareem, A. S. M. Noor, A. I. Abubakar, N. S. Safa, L. Shuib, M. F. Hamza, A. Y. Gital, T. Herawan, A review on artificial intelligence methodologies for the

forecasting of crude oil price, Intelligent Automation and Soft Computing 22 (3) (2016) 449–462.

[7] Z. H. Ling, L. Deng, D. Yu, modeling spectral envelopes using restricted boltzmann machines and deep belief networks for statistical parametric speech synthesis, IEEE Transactions on Audio, Speech, and Language Processing 21 (10) (2013) 2129–2139.

[8] J. B. Heaton, N. G. Polson, J. H. Witte, Deep learning for finance: deep portfolios, Applied Stochastic Models in Business and Industry 33 (1) (2017) 3–12.

[9] M. H. Rafiei, H. Adeli, A novel machine learning model for estimation of sale prices of real estate units, Journal of Construction Engineering and Management 142 (2) (2016) 04015066.

[10] H. Y. Zeng, M. D. Edwards, G. Liu, D. K. Gifford, Convolutional neural network architectures for predicting dna-protein binding, Bioinformatics 32 (12) (2016) 121–127.

[11] A. Dedinec, S. Filiposka, A. Dedinec, L. Kocarev, Deep belief network-based electricity load forecasting: An analysis of macedonian case, Energy 115, Part 3 (2016) 1688 – 1700, sustainable Development of Energy, Water and Environment Systems.

[12] G. E. Hinton, R. R. Salakhutdinov, Reducing the dimensionality of data with neural networks, Science 313 (5786) (2006) 504.

[13] Y. Bengio, Learning Deep Architectures for AI, Now Publishers, 2009. [14] H. Lee, R. Grosse, R. Ranganath, A. Y. Ng, Convolutional deep belief networks for scalable unsupervised learning of hierarchical representations, in: International Conference on Machine Learning, 2009, pp. 609 – 616.

[14] G. E. Hinton, S. Osindero, Y. W. Teh, A fast learning algorithm for deep belief nets, Neural Computation 18 (7) (2014) 1527–1554.

[15] I. Arel, D. C. Rose, T. P. Karnowski, Deep machine learning - a new frontier in artificial intelligence research [research frontier], IEEE Computational Intelligence Magazine 5 (4) (2010) 13–18.

[16] S. Hochreiter, J. Schmidhuber, long short-term memory, Neural Computation 9 (8) (1997) 1735.

[17] F. A. Gers, J. Schmidhuber, F. Cummins, learning to forget: Continual prediction with lstm. neural computation 12(10): 2451-2471, Neural Computation 12 (10) (2000) 2451–2471